CSP-30ES-013

RF Probe for SMA Connectors

Product Family: CSP

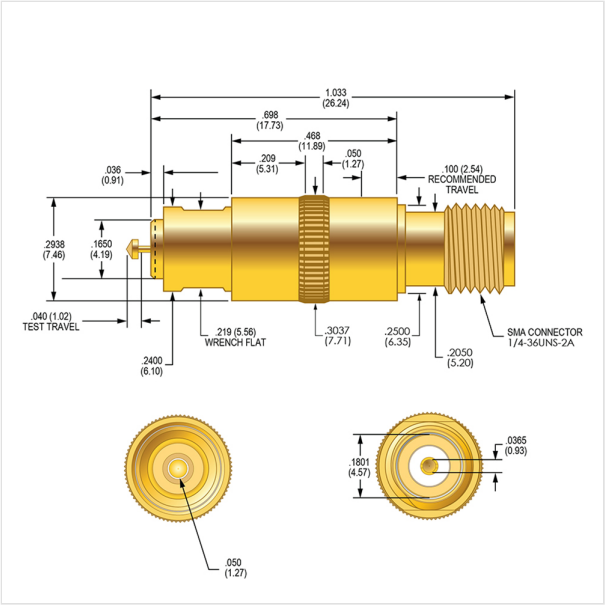

Springs

Force Type – Preload in oz (g) – Rec. Travel in oz (g) - Spring Material

Standard - 3.06 (86.70) - 4.00 (113.40) -

Related Products:
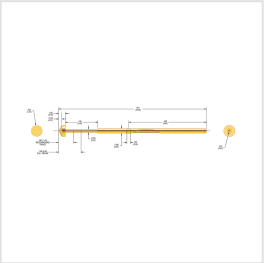
SPL-30E-030